# Future Impact Oscillators
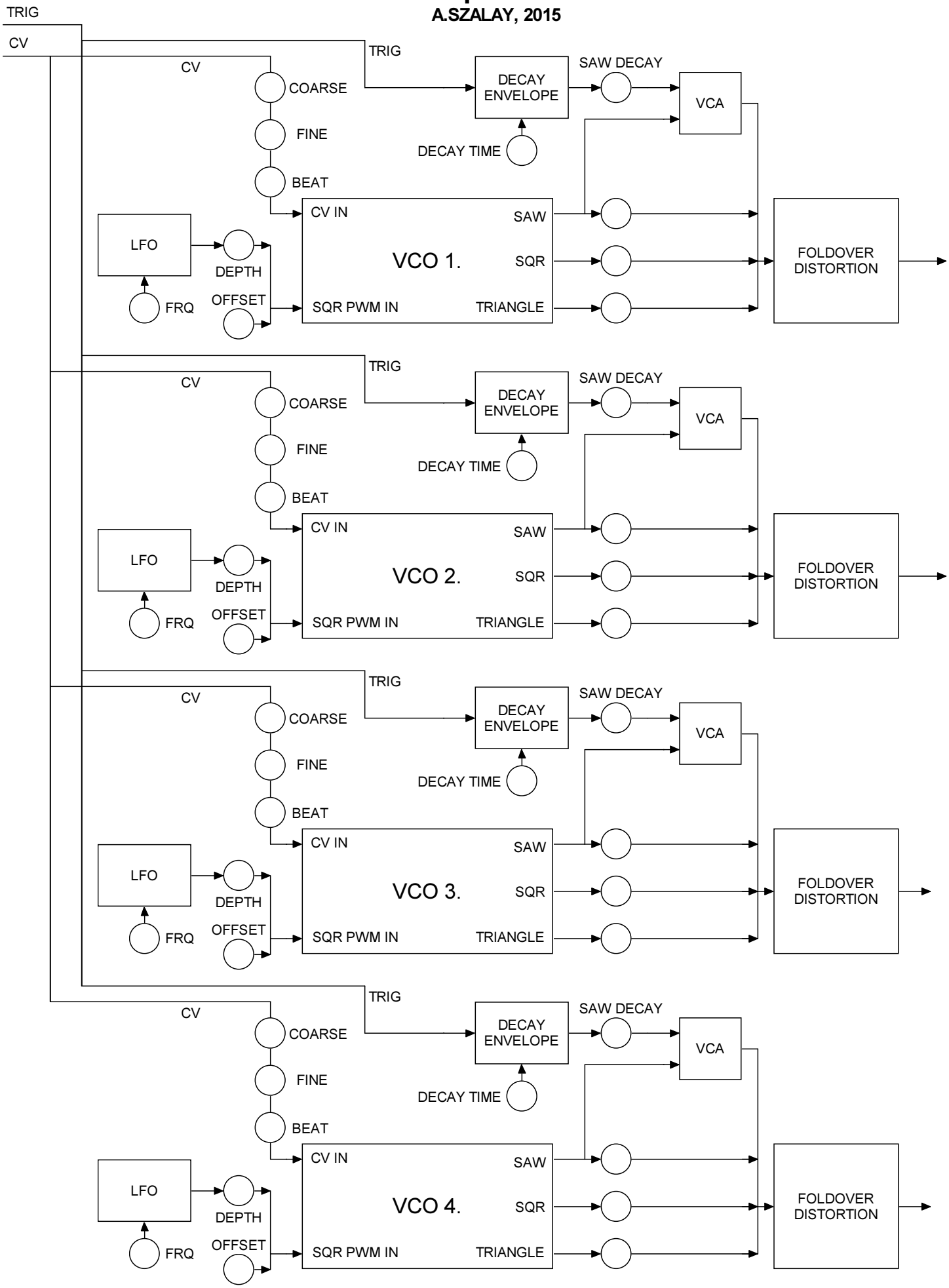
**A.SZALAY, 2015**